70' BeltVeyor

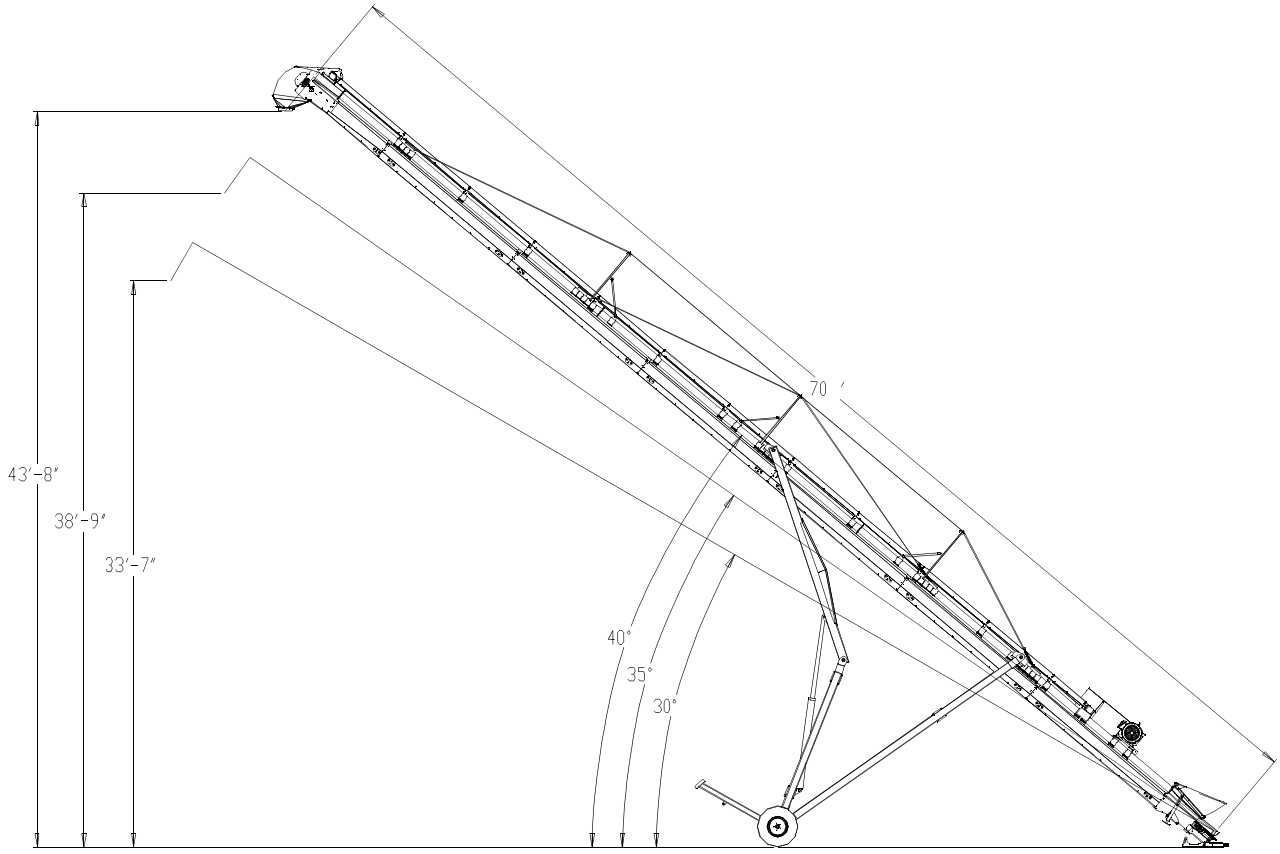

70'-16" Honeycomb Belt				70'-16" Crescent Belt			
ft/min	angle	bu/hr	hp	ft/min	angle	bu/hr	hp
380	30	3000	15.4	380	27	2700	14.0
380	35	2750	16.0				
380	40	2500	16.7				
457	30	3483	16.8	457	27	3000	16.9
457	35	3193	17.4				
457	40	2903	18.2				
576	30	4230	18.9	576	27	3410	17.6
576	35	3878	19.7				
576	40	3525	20.5				
706	30	5046	21.2	706	27	3750	20.0
706	35	4626	22.1				
706	40	4205	23.0				
858	30	6000	23.5	858	27	4000	21.0
858	35	5500	24.5				
858	40	5000	25.5				

All bu/hr was done with 60 lb/bu wheat @ 12%-15% moisture

Undercarriage -	hydraulic	
Available drives -	Electric	
	PTO	
Electric -	25 hp minimum	
	Use 3 phase @1800 RPM	
PTO -	Use 540 PTO	
Drive Type -	Head drive jack-shaft style	
Belt -	16" Honeycomb cleat	
	16" crescent	
Maximum angle -	Crescent	27 degrees
	Honeycomb	40 plus degrees

Operations above recommended angle WILL result in damage to unit.

70' BeltVeyor - Electric
Head, Tail and Pan

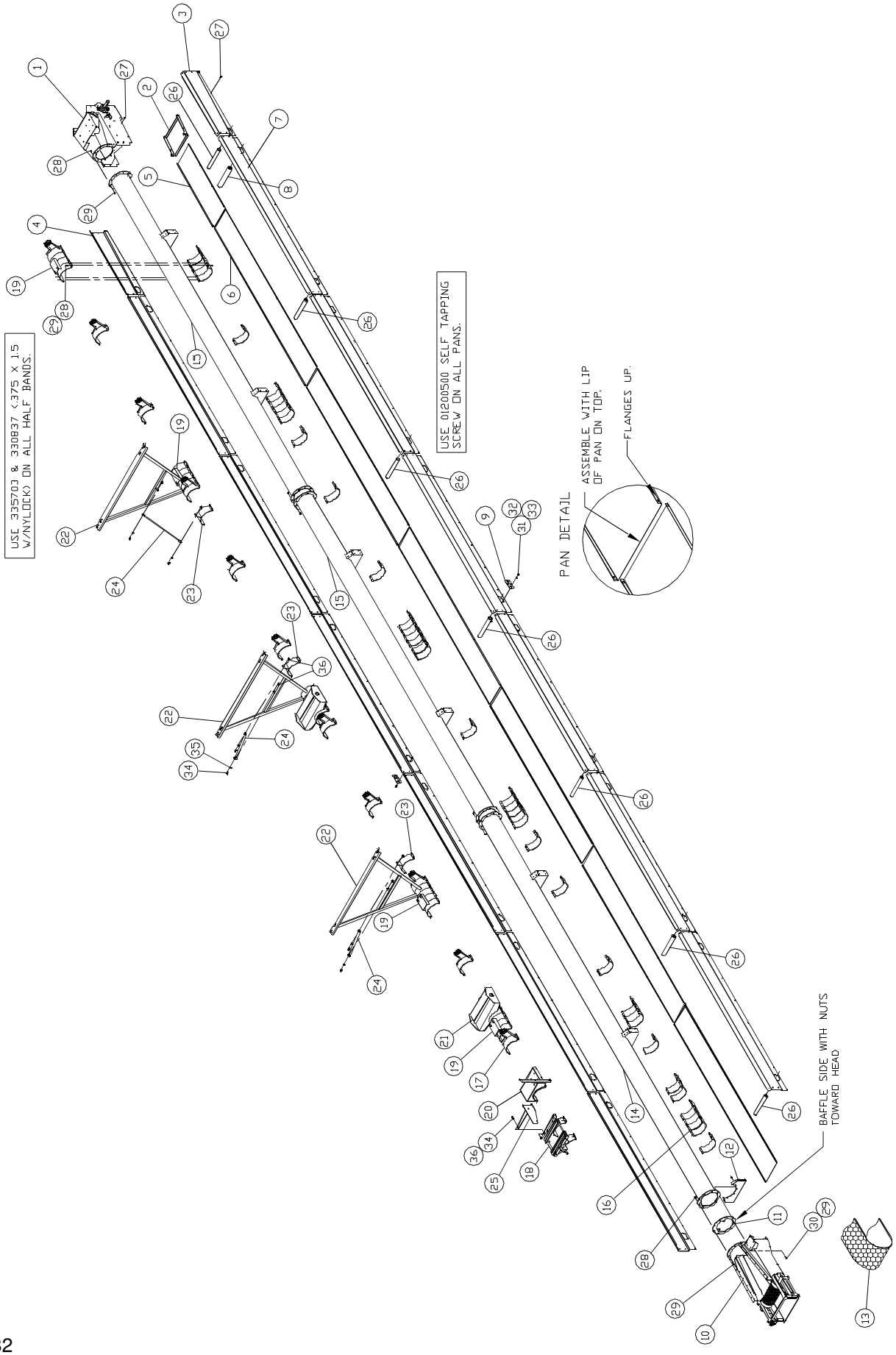

70' BeltVeyor - Electric
Head, Tail and Pan

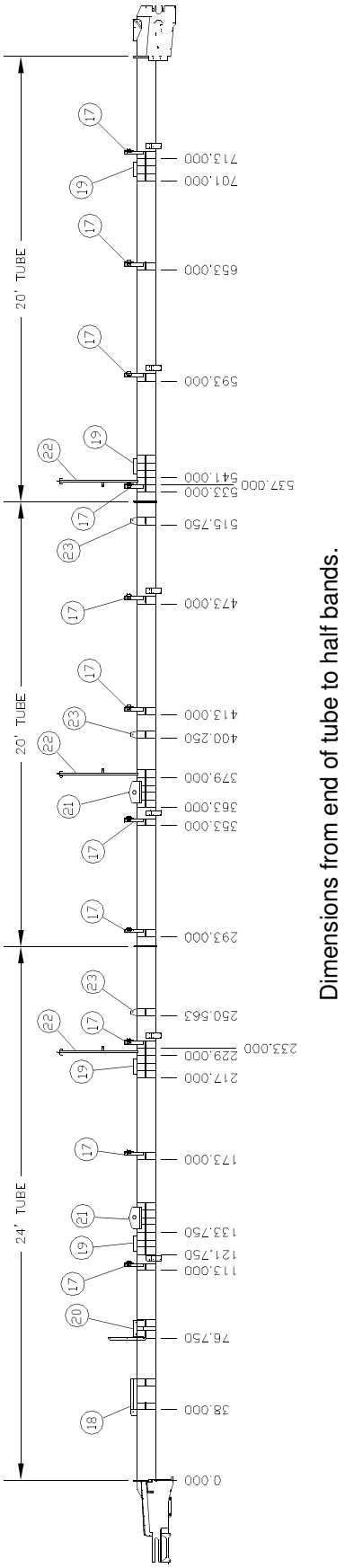

Dimensions from end of tube to half bands.

#62968300

Item	Qty	Part No.	Description
1	1	63086300	Head Assembly -10" Roller
2	1	30720700	Head Pan
3	1	30719900	Pan Side 4' Right
4	1	30161400	Pan Side 4' Left
5	1	30162200	Pan 4'
6	6	30164800	Pan 10'
7	12	30163000	Pan Side 10'
8	1	60196300	Plastic Roller 2 3/8"
9	26	30328900	Roller Slot Cover
10	1	62951900	Tail Assembly
11	1	82762600	Baffle
12	1	30731400	Tail Mount
13	1	62992300	Honeycomb Belt 16" x 138'-10"
14	1	82716200	Tube 10" x 24'
15	2	82717000	Tube 10" x 20'
16	41	10319210	Half Band 4 x 10
17	11	63085500	Bearing Mount Assembly
18	1	81879900	Electric Motor Mount
19	4	82737800	Cable Mount
20	1	82729500	Gear Box Mount
21	2	82907700	Axle Mount
22	3	82739400	Truss Long
23	3	82742800	Truss Brace
24	3	17122300	Truss Arm
25	1	30222400	Tail Guard Bracket
26	7	63104400	Plastic Roller 2"
27	200	01200500	Screw 5/16 x 3/4 Washer Head Self-Tap
28	198	335703	HHCS 3/8 x 1½"
29	200	330837	Nylock 3/8
30	2	332890	Carriage Bolt 3/8" x 1 3/4"
31	52	337949	Carriage Bolt 1/4 x 3/4"
32	52	02016400	Flat Washer 1/4"
33	52	330522	Nylock 1/4"
34	8	01180900	HHCS ½" x 1 1/4"
35	6	330159	Flat Washer ½"
36	8	331363	Nylock ½"

70' BeltVeyor - Electric
Conveyor Parts

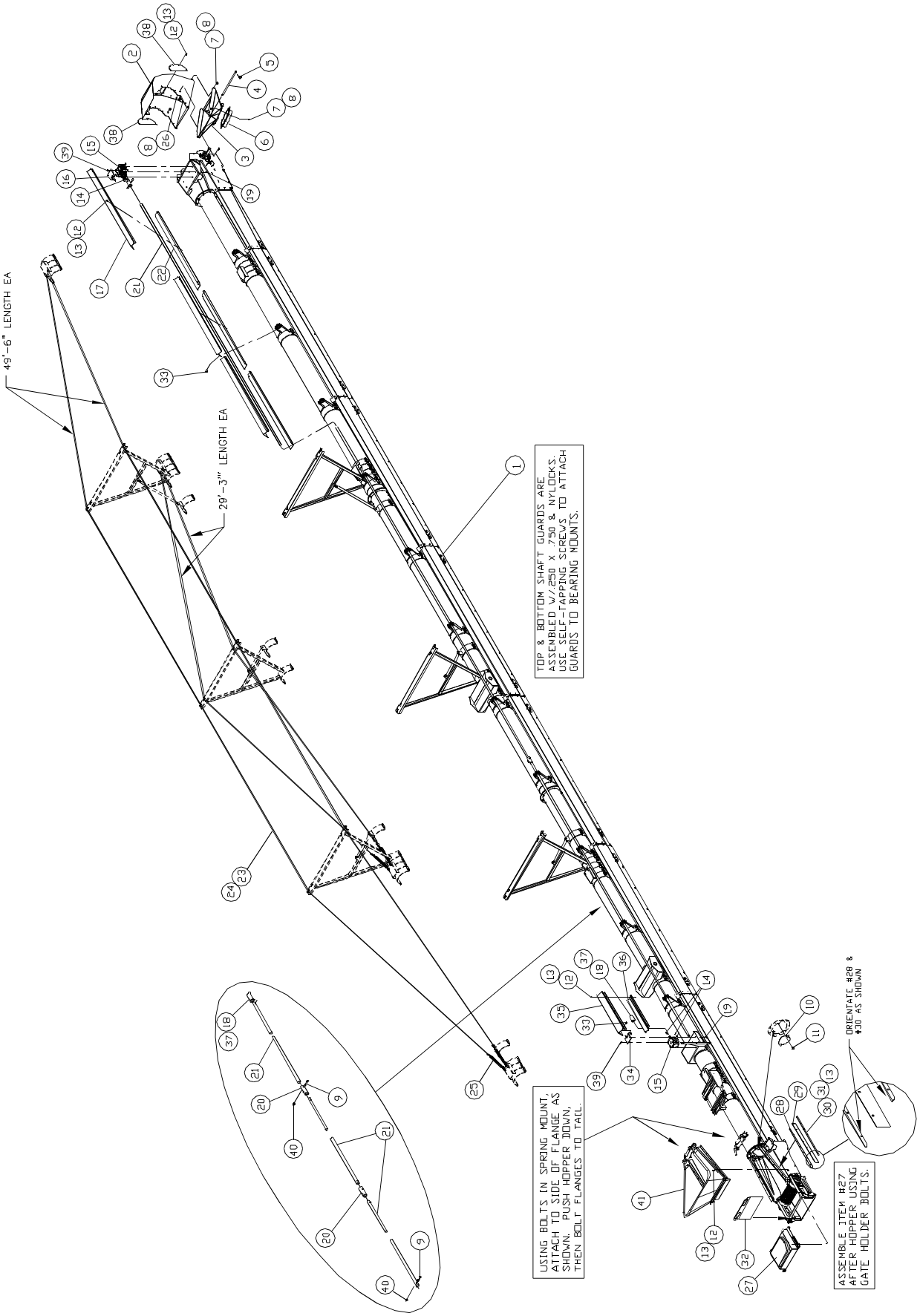

70' BeltVeyor - Electric
Conveyor Parts

#62969100

Item	Qty	Part No.	Description
1	1	62968300	Head-Tail-Tube Assembly
2	1	63022800	Spout Top w/lining
3	1	82779000	Spout Bottom -10" Round
4	1	30302400	Spout Pin
5	2	330928	Klik Pin 3/16"
6	1	82791500	10" Spout Tube
7	11	01145200	HHCS 3/8 x 3/4"
8	17	330837	Nylock 3/8"
9	6	331926	HHCS ½" x 2"
10	1	30337000	Baffle Plate
11	2	01017300	HHCS 3/8" x 1"
12	96	01057900	HHCS 1/4" x 3/4"
13	110	330522	Nylock 1/4"
14	3	10490100	Key 1/4 x 1 1/4"
15	2	04007100	Gear Box
16	1	30213300	Head Guard Mount
17	11	30200000	Shaft Guard Top Long
18	2	30202600	Sleeve w/keyway
19	8	01010800	HHCS 5/16" x 1"
20	2	30203400	Shaft Sleeve
21	3	30201800	Drive Shaft
22	11	30199400	Shaft Guard Bottom Long
23	57.5'	01506500	Cable 3/8 x 19
24	16	01502400	Cable Clamp 3/8
25	4	04151700	Turnbuckle 5/8" x 9
26	6	330654	Carriage Bolt 3/8 x 1"
27	1	62956800	Belt Cover & Brush
28	2	30158000	Inner Skirtboard
29	2	30157200	Nylon Skirtboard
30	2	30159800	Outer Skirtboard
31	14	333633	HHCS 1/4 x 1 1/4"
32	1	30204200	Tail Door
33	96	01200500	Screw 5/16 x 3/4 Washer Head Self-Tap
34	1	30212500	Tail Guard Mount
35	1	30373500	Shaft Guard Top Short
36	1	30374300	Shaft Guard Bottom Short
37	2	337758	Set Screw 1/4-20 x 1/4"
38	2	30721500	Spout Guard
39	4	01144500	HHCS 5/16" x 3/4"
40	6	331363	Nylock ½"
41	1	62997200	Flex Hopper Assembly

70' BeltVeyor - Electric
Drive and Undercarriage

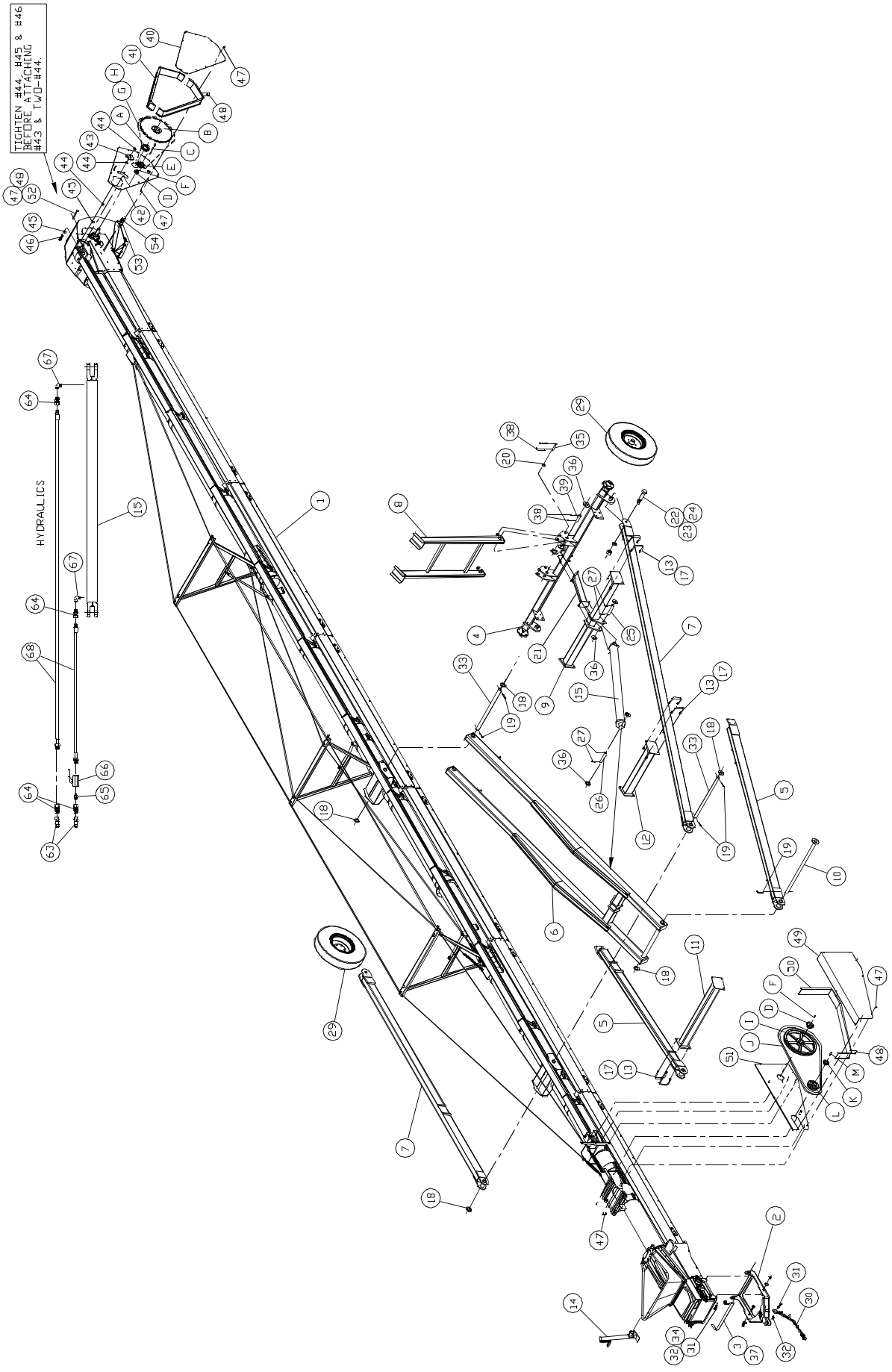

70' BeltVeyor - Electric
Drive and Undercarriage

#90867300

Item	Qty	Part No.	Description
1	1	62969100	Conveyor Assembly
2	1	82745100	Pivot Hitch
3	1	30243000	Pivot Hitch Handle
4	1	61432100	Axle & Hub Assembly
5	2	82751900	Lift Arm Lower
6	1	82752700	Lift Arm Upper
7	2	82753500	Axle Arm
8	1	82789900	Lift Arm Support
9	1	82755000	Cylinder Bar Lower
10	1	82748500	Axle Pivot
11	1	82749300	Axle Lift Arm
12	1	82750100	Lift Arm Brace
13	16	14307300	U-bolt ½" x 4½" x 5"
14	1	531558	Jack 20,000# Side Crank w/Bottom Mount
15	1	474049	Hydraulic Cylinder 5 x 60
16	1	330928	Klik Pin 3/16"
17	32	331363	Nylock ½"
18	5	330423	Flat Washer 1½"
19	5	336081	Cotter Pin 1/4 x 3"
20	4	330407	Flat Washer 1"
21	1	82899600	Axle Brace
22	2	338863	HHCS 1½" x 6"
23	2	335943	Lock Washer 1½"
24	2	331082	Hex Nut 1½"
25	1	30362800	Pin 1 1/4" x 8 5/16"
26	1	30363600	Pin 1 1/4" x 5 7/16"
27	4	02154300	Cotter Pin 5/32" x 1 3/4"
28	2	18972000	Pin 1" x 4 3/4"
29	2	807313	Tire & Rim 9.5L x 15 6Ply 5 bolt rim
30	1	433938	Safety Chain 11,000#
31	3	02307700	HHCS 3/4" x 3"
32	3	330316	Nylock 3/4"
33	2	30763700	Axle Arm Pin
34	2	330340	Flat Washer 3/4"
35	2	330357	HHCS 1" x 5½"
36	8	330415	Flat Washer 1 1/4"
37			
38	6	02288900	Cotter Pin 3/16" x 2"
39	2	14402200	Pin 1 1/4" x 4 3/4"
40	1	30197800	Guard Cover
41	2	30198600	Guard Side
42	1	30196000	Guard Back Plate
43	1	04074100	Idler Sprocket #80-12T
44	3	330571	Hex Nut 5/8"
45	2	330183	Flat Washer 5/8"
46	1	04121000	HHCS 5/8" x 3"
47	64	01057900	HHCS 1/4" x 3/4"
48	64	330522	Nylock 1/4"
49	1	30211700	Sheave Guard Cover
50	1	30218200	Tail Guard Side
51	1	30221600	Tail Guard Back Plate
52	1	30732200	Head Guard Bracket Top
53	1	30331300	Head Guard Bracket Side
54	2	01200500	Screw 5/16" x 3/4" Washer Head Self Tap
63	2	465385	Coupler Male ¾ FOR
64	4	466912	Adapter Straight ¾ MOR / ½ NPTF
65	1	00627000	Adapter Straight ½ NPTM / ½ NPTM
66	1	03227600	Hyd. Ball Valve ½ NPTF
67	2	463513	Adapter 90° -Restrictor ½ NPTM / ⅜ NPTF Sw
68	2	61471900	Hose ⅜ x 720" ½ NPTM / ⅜ NPTM

70' Electric Drive Options

Description	#63011100 380 FPM	#63015200 457 FPM	#63105100 706 FPM	#63012900 858 FPM
A- Bushing	00730200	00730200	00730200	00730200
B- Sprocket	03163300	03163300	01304500	01304500
C- Key	20072500	20072500	20072500	20072500
D- Bushing	04332300	04332300	04332300	04332300
E- Sprocket	01303700	01303700	01303700	01303700
F- Key	10490100	10490100	10490100	10490100
G- Chain	30333900	30333900	30334700	30334700
H- Connector	00232900	00232900	00232900	00232900
I- Sheave	04285300	04285300	04285300	04285300
J- V-Belt	03578200	03562600	03578200	03562600
K- Bushing	01505700	01505700	01505700	01505700
L- Sheave	04371100	04303400	04371100	04303400
M-Key	12993200	12993200	12993200	04303400

70' BeltVeyor - PTO
Head,Tail, and Pan

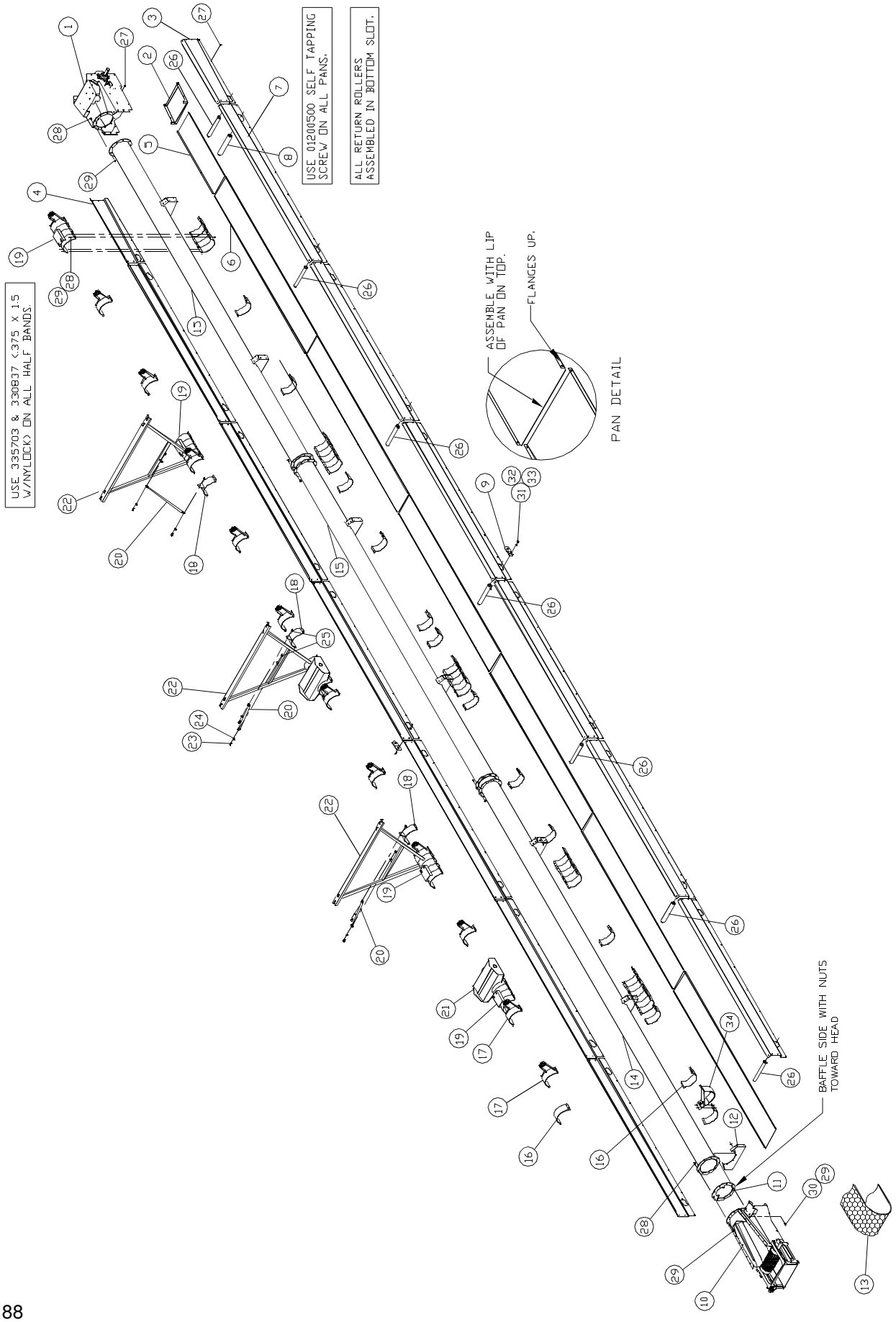

70' BeltVeyor - PTO
Head, Tail and Pan

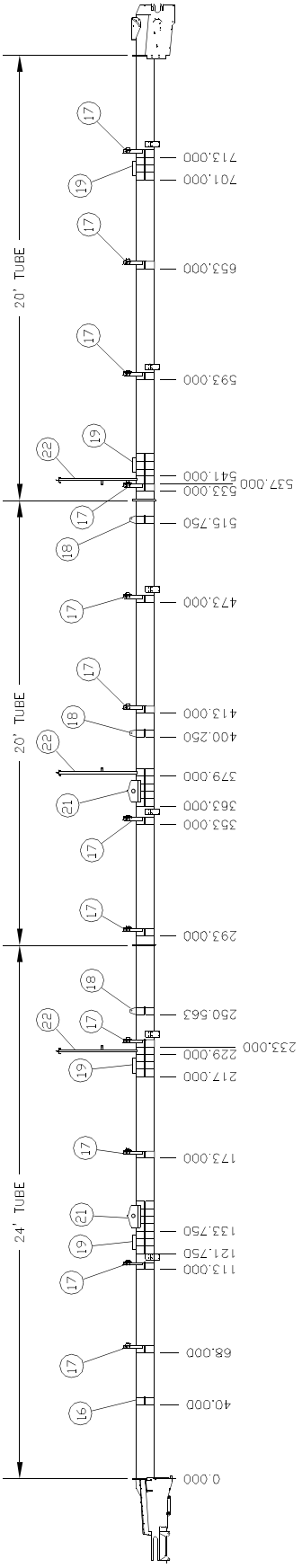

Dimensions from end of tube to half bands.

#63108500

Item	Qty	Part No.	Description
1	1	63086300	Head Assembly -10" Roller
2	1	30720700	Head Pan
3	1	30719900	Pan Side 4' Right
4	1	30161400	Pan Side 4' Left
5	1	30162200	Pan 4'
6	6	30164800	Pan 10'
7	12	30163000	Pan Side 10'
8	1	60196300	Plastic Roller 2 3/8"
9	26	30328900	Roller Slot Cover
10	1	62951900	Tail Assembly
11	1	82762600	Baffle
12	1	30731400	Tail Mount
13	1	62992300	Honeycomb Belt 16" x 138'-10"
14	1	82716200	Tube 10" x 24'
15	2	82717000	Tube 10" x 20'
16	40	10319210	Half Band 4 x 10
17	12	63085500	Bearing Mount Assembly
18	3	82742800	Truss Brace
19	4	82737800	Cable Mount
20	3	17122300	Truss Arm
21	2	82727900	Axle Mount
22	3	82739400	Truss Long
23	6	01180900	HHCS ½" x 1 1/4"
24	6	330159	Flat Washer ½"
25	6	331363	Nylock ½"
26	7	63104400	Plastic Roller 2"
27	200	01200500	Screw 5/16 x 3/4 Washer Head Self-Tap
28	190	335703	HHCS 3/8 x 1½"
29	192	330837	Nylock 3/8"
30	2	332890	Carriage Bolt 3/8" x 1 3/4"
31	52	337949	Carriage Bolt 1/4 x 3/4"
32	52	02016400	Flat Washer 1/4"
33	52	330522	Nylock 1/4"
34	1	62056700	PTO Shaft Carrier

70' Beltveyor - PTO
Conveyor Parts

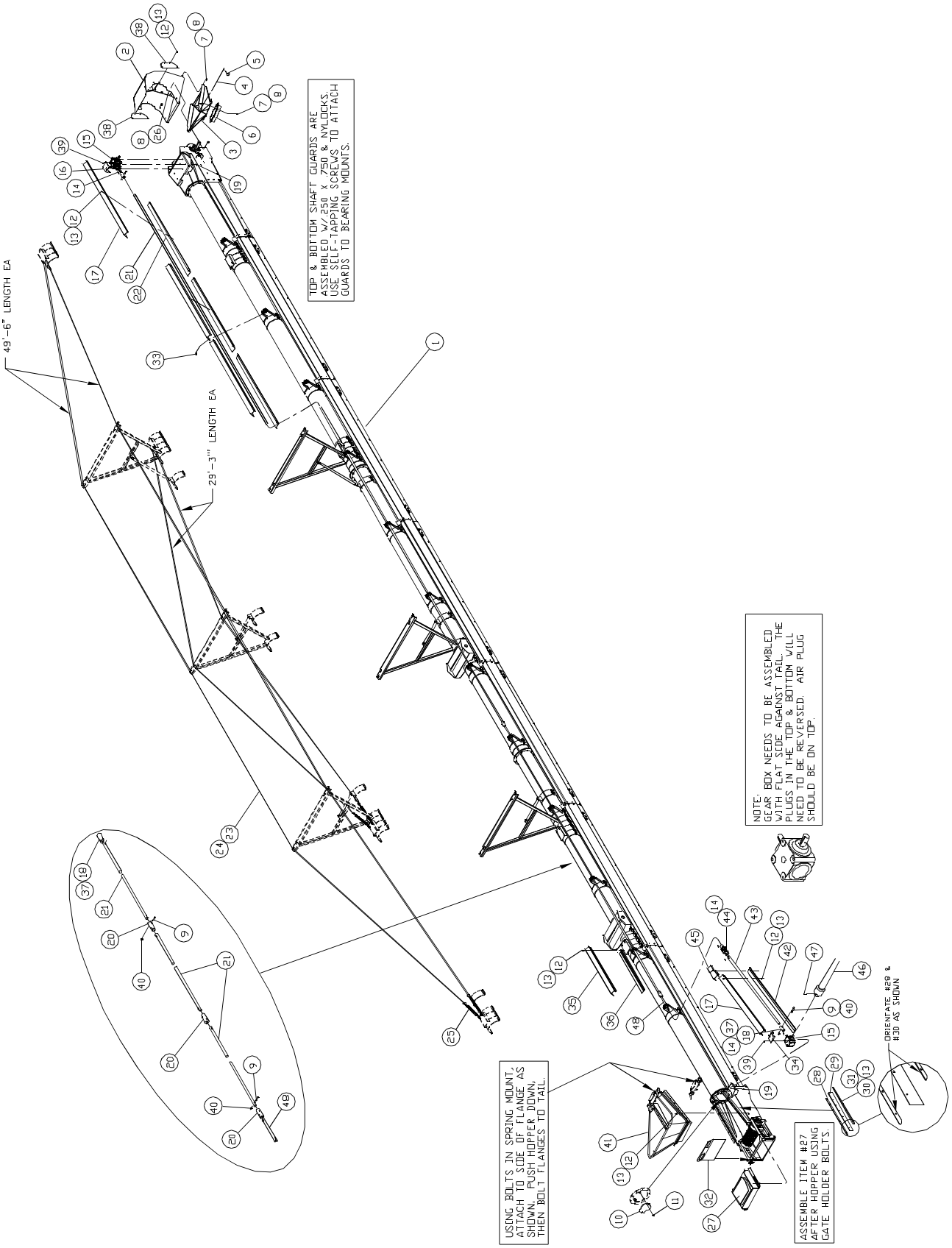

70' BeltVeyor - PTO
Conveyor Parts

#63109300

Item	Qty	Part No.	Description
1	1	63108500	Head-Tail-Tube Assembly
2	1	63022800	Spout Top w/lining
3	1	82779000	Spout Bottom -10" Round
4	1	30302400	Spout Pin
5	2	330928	Klik Pin 3/16"
6	1	82791500	10" Spout Tube
7	11	01145200	HHCS 3/8 x 3/4"
8	17	330837	Nylock 3/8"
9	8	331926	HHCS ½" x 2"
10	1	30337000	Baffle Plate
11	2	01017300	HHCS 3/8" x 1"
12	98	01057900	HHCS 1/4" x 3/4"
13	112	330522	Nylock 1/4"
14	3	10490100	Key 1/4 x 1 1/4"
15	2	04007100	Gear Box
16	1	30213300	Head Guard Mount
17	12	30200000	Shaft Guard Top Long
18	2	30202600	Sleeve w/keyway
19	8	01010800	HHCS 5/16" x 1"
20	3	30203400	Shaft Sleeve
21	3	30201800	Drive Shaft
22	11	30199400	Shaft Guard Bottom Long
23	157.5'	01506500	Cable 3/8 x 19
24	16	01502400	Cable Clamp 3/8
25	4	04151700	Turnbuckle 5/8" x 9
26	6	330654	Carriage Bolt 3/8 x 1"
27	1	62956800	Belt Cover & Brush
28	2	30158000	Inner Skirtboard
29	2	30157200	Nylon Skirtboard
30	2	30159800	Outer Skirtboard
31	14	333633	HHCS 1/4 x 1 1/4"
32	1	30204200	Tail Door
33	104	01200500	Screw 5/16 x 3/4 Washer Head Self-Tap
34	1	30212500	Tail Guard Mount
35	1	30476600	Shaft Guard Top Short
36	1	30475800	Shaft Guard Bottom Short
37	2	337758	Set Screw 1/4-20 x 1/4"
38	2	30721500	Spout Guard
39	4	01144500	HHCS 5/16" x 3/4"
40	8	331363	Nylock ½"
41	1	62997200	Flex Hopper Assembly
42	1	30477400	Shaft Guard -Bottom Drive
43	1	30472500	Shaft -Bottom Drive
44	1	04120200	U-Joint 12N 1 1/4 x 1 1/4 Round
45	1	30474100	Guard Splice
46	1	06273700	PTO Shaft
47	1	08993800	Roll Pin 1/4" x 2"
48	1	30473300	Keyed Shaft

70' Beltveyor - PTO
Drive and Undercarriage

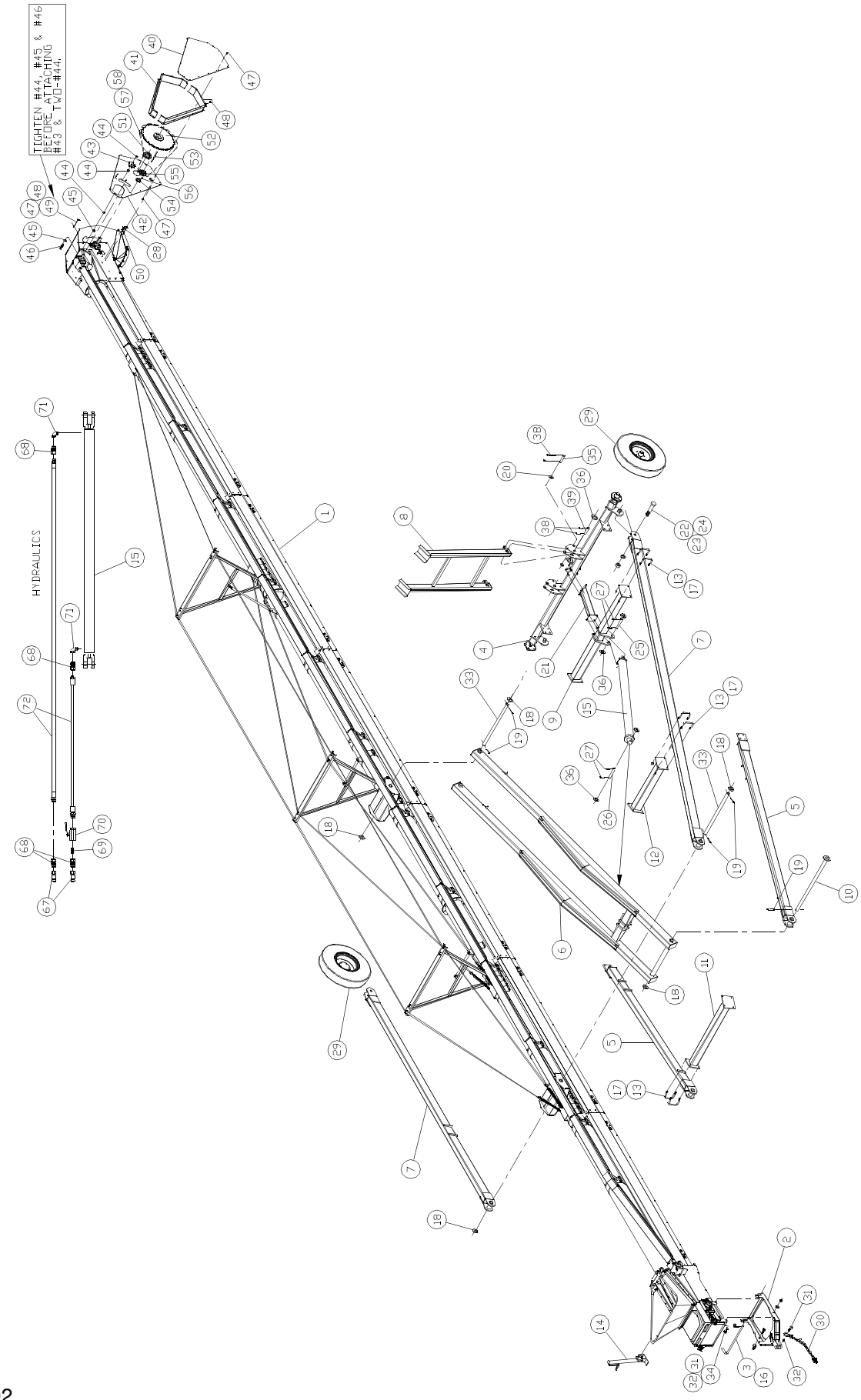

70' BeltVeyor - PTO
Drive and Undercarriage

#90898800

Item	Qty	Part No.	Description
1	1	63109300	Conveyor Assembly
2	1	82745100	Pivot Hitch
3	1	30243000	Pivot Hitch Handle
4	1	61432100	Axle & Hub Assembly
5	2	82751900	Lift Arm Lower
6	1	82752700	Lift Arm Upper
7	2	82753500	Axle Arm
8	1	82789900	Lift Arm Support
9	1	82755000	Cylinder Bar Lower
10	1	82748500	Axle Pivot
11	1	82749300	Axle Lift Arm
12	1	82750100	Lift Arm Brace
13	16	14307300	U-bolt ½" x 4½" x 5"
14	1	531558	Jack 20,000# Side Crank w/Bottom Mount
15	1	474049	Hydraulic Cylinder 5 x 60
16	1	330928	Klik Pin 3/16"
17	32	331363	Nylock ½"
18	5	330423	Flat Washer 1½"
19	5	336081	Cotter Pin 1/4 x 3"
20	4	330407	Flat Washer 1"
21	1	82899600	Axle Brace
22	2	338863	HHCS 1½" x 6"
23	2	335943	Lock Washer 1½"
24	2	331082	Hex Nut 1½"
25	1	30362800	Pin 1 1/4" x 8 5/16"
26	1	30363600	Pin 1 1/4" x 5 7/16"
27	4	02154300	Cotter Pin 5/32" x 1 3/4"
28	2	01200500	Screw 5/16" x 3/4" Washer Head Self Tap
29	2	807313	Tire & Rim 9.5L x 15 6Ply 5 bolt rim
30	1	433938	Safety Chain 11,000#
31	3	02307700	HHCS 3/4" x 3"
32	3	330316	Nylock 3/4"
33	2	30763700	Axle Arm Pin
34	2	330340	Flat Washer 3/4"
35	2	18972000	Pin 1" x 4 3/4"
36	8	330415	Flat Washer 1 1/4"
37			
38	6	02288900	Cotter Pin 3/16" x 2"
39	2	14402200	Pin 1 1/4" x 4 3/4"
40	1	30197800	Guard Cover
41	2	30198600	Guard Side
42	1	30196000	Guard Back Plate
43	1	04074100	Idler Sprocket #80-12T
44	3	330571	Hex Nut 5/8"
45	2	330183	Flat Washer 5/8"
46	1	04121000	HHCS 5/8" x 3"
47	41	01057900	HHCS 1/4" x 3/4"
48	41	330522	Nylock 1/4"
49	1	30732200	Head Guard Bracket Top
50	1	30331300	Head Guard Bracket Side
51	1	00730200	Bushing 1½" SF QD
52	1	01420900	Sprocket #80 26T SF
53	3	20072500	Key 3/8" x 2"
54	1	04332300	Bushing 1" SK
55	1	01303700	Sprocket #80 15T SK
56	4	10490100	Key 1/4" x 1 1/4"
57	1	14498000	Chain #80 x 60 Pitches
58	1	00232900	Chain #80 Connector
67	2	465385	Coupler Male ¾ FOR
68	4	466912	Adapter Straight ¾ MOR / ½ NPTF
69	1	00627000	Adapter Straight ½ NPTM / ½ NPTM
70	1	03227600	Hyd. Ball Valve ½ NPTF
71	2	463513	Adapter 90° -Restrictor ½ NPTM / ⅜ NPTF Sw
72	2	61471900	Hose ⅜ x 720" ½ NPTM / ⅜ NPTM

CrustBuster
SPEED KING INC.

P.O.Box 1438 Dodge City, Kansas 67801 (620) 227-7106